K-FLEX K-FIRE

www.cra.sk

Požiarna klasifikácia

- E - Integrita, čas potrebný na to aby sa fyzicky rozšíril cez požiarnu upchávku. V okamihu zlyhania je možné vidieť žiaru ohňa cez upchávku, plamene prechádzajúce skrz, vatový tampón sa vznieti, keď ho skúšobný technik drží blízko upchávky.

- I - Izolácia, teplota, meraná na strane nevystavenej ohňu narástla na 180°C na upchávke alebo rozvodoch. Toto sa meria pomocou mnohých termočlánkov umiestnených na strategických miestach. Zámerom je replikovať najnižšiu možnú teplotu, ktorá môže viesť k požiaru, aj keď samotný oheň neprešiel cez protipožiarnu upchávku. Toto je ťažšie dosiahnuteľná klasifikácia.

Vo väčšine európskych krajín existuje požiadavka, aby klasifikácia požiaru zahŕňala integritu E aj izoláciu I. Ak je však protipožiarna upchávka v oblasti, kde nie je blízko žiadny horľavý materiál a nie je pravdepodobné, že by horľavé materiály boli umiestnené v blízkosti, mohol by byť prijatý technický úsudok na schválenie iba použitia klasifikácie integrity .

Po písmenách nasleduje číslo, ktoré udáva, ako dlho sa zachovala integrita a izolácia v minútach.

L'ISOLANTE K-FLEX SRL
UNIstore - 2014 - 373187

Table 1 — Definition of pipe insulation (3.13)

	Sustained	*Interrupted*
Continued	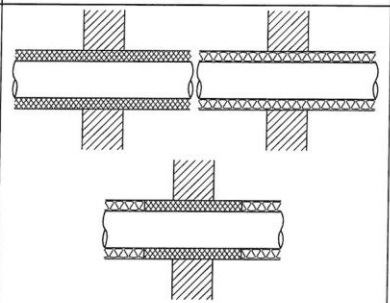 Case CS	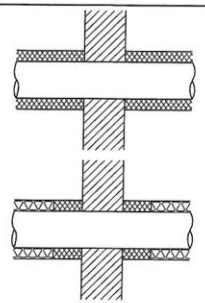 Case CI
Local	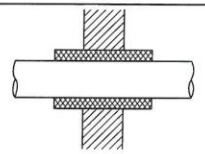 Case LS	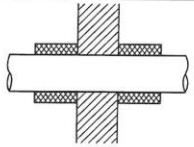 Case LI

NOTE Depending on the reaction to fire classification of the insulation, the insulation may be the penetration seal / be part of the penetration seal or additional sealing means (which are not shown in the figures) may be necessary. For further explanation see Annex H.

Key

- Building element
- Pipe
- Thermal/acoustic/other pipe insulation
- Insulation acting as penetration seal or forming part of the penetration seal

www.cra.sk

E.2.7.4 Pipe and insulation material

The pipe and/or insulation material range permitted is the range covered by the test including the critical pipe approach results where applicable.

Test results on pipes made from PVC-U according to EN 1329-1, EN 1453-1 or EN 1452-1 are valid for pipes made from PVC-U according to EN 1329-1, EN 1453-1 and EN 1452-1 as well as pipes made from PVC-C according to EN 1566-1.

Test results on pipes made from PE-HD according to EN 1519-1 or EN 12666-1 are valid for pipes made from PE according to EN 12201-2, EN 1519-1 and EN 12666-1, for pipes made from ABS according to EN 1455-1 and pipes made from SAN+PVC according to EN 1565-1.

K-FLEX K-FIRE

K-FLEX
FIRE
ACRILIC
4 HOURS
FIRE RESISTANCE
EI 240

K-FLEX
FIRE
EX MORTAR
K-FLEX
FIRE

K-FLEX
K-FIRE
COATING

K-FLEX
K-FIRE
COLLAR-Z
K-FLEX
K-FIRE
COLLAR-S
K-FLEX
K-FIRE
COLLAR-P

K-FLEX
FIRE
WRAP

Rozvody

horľavé potrubia

Oceľové potrubia +FEF

medené potrubia +FEF

alupex potrubia +FEF

oceľové potrubia +MW

káble / káble v zväzkoch

káble v káblových žľaboch

ETA dokumentácia

K-Flex K-Fire EX Mortar - ETA 17/1046

K-Flex K-Fire Pipe Wrap - ETA 17/1049

K-Flex K-Fire Acrylic - ETA 17/ 1047 & 1048

K-Flex K-Fire Collar – ETA 15/0756, -ETA 17/1020

K-Fire Sealant A Plus – ETA 15/0795

K-FIRE Sealant S Plus - ETA 15/0817

K-Flex K-Fire Board / Coating- ETA 17/1021 & 1022

UL INTERNATIONAL (UK) LTD
Wonersh House, Building C,
The Guildway,
Old Portsmouth Road,
Guildford. GU3 1LR
United Kingdom.

Member of EOTA www.eota.eu

designated according to Article 29 of the Regulation (EU) No 305/2011 and member of EOTA (European Organisation for Technical Assessment, www.eota.eu)

European Technical Assessment — **ETA 17/1046 of 21/12/2017**

Technical Assessment Body issuing the ETA and designated according to Article 29 of the Regulation (EU) No 305/2011:	UL International (UK) Ltd
Trade name of the construction product	K-FLEX K-FIRE EX MORTAR
Product family to which the construction product belongs	Fire Stopping and Sealing Product: • Penetration Seals
Manufacturer	L'ISOLANTE K-FLEX S.p.A. Via Don G. Locatelli 35 20877 Roncello MB Italy
Manufacturing plant(s)	A/003
This European Technical Assessment contains	64 pages including 1 Annex which forms an integral part of this assessment.
This European Technical Assessment is issued in accordance with regulation (EU) No 305/2011, on the basis of	ETAG 026-2, edition 2011, used as European Assessment Document (EAD).

Translations of this European Technical Assessment in other languages shall fully correspond to the original issued document and should be identified as such.

Communication of this European Technical Assessment, including transmission by electronic means, shall be in full. However, partial reproduction may be made, with the written consent of the issuing Technical Assessment Body. Any partial reproduction has to be identified as such.

ETA 17/1046 of 21/12/2017 – page 1 of 64

UL INTERNATIONAL (UK) LTD
Wonersh House, Building C,
The Guildway,
Old Portsmouth Road,
Guildford. GU3 1LR
United Kingdom.

Member of EOTA www.eota.eu

designated according to Article 29 of the Regulation (EU) No 305/2011 and member of EOTA (European Organisation for Technical Assessment, www.eota.eu)

European Technical Assessment — **ETA 17/1049 of 07/03/2019**

Technical Assessment Body issuing the ETA and designated according to Article 29 of the Regulation (EU) No 305/2011:	UL International (UK) Ltd
Trade name of the construction product	K-FLEX K-FIRE PIPE WRAP
Product family to which the construction product belongs	Fire Stopping and Sealing Product: • Penetration Seals
Manufacturer	L'ISOLANTE K-FLEX S.p.A. Via Don G. Locatelli 35 20877 Roncello MB Italy
Manufacturing plant(s)	A/003
This European Technical Assessment contains	69 pages including 1 Annex which forms an integral part of this assessment.
This European Technical Assessment is issued in accordance with regulation (EU) No 305/2011, on the basis of	EAD 350454-00-1104, September 2017.
This version replaces	ETA 17/1049 issued on 21/12/2017

Translations of this European Technical Assessment in other languages shall fully correspond to the original issued document and should be identified as such.

Communication of this European Technical Assessment, including transmission by electronic means, shall be in full. However, partial reproduction may be made, with the written consent of the issuing Technical Assessment Body. Any partial reproduction has to be identified as such.

ETA 17/1049 of 07/03/2019 – page 1 of 69

UL INTERNATIONAL (UK) LTD
Wonersh House, Building C,
The Guildway,
Old Portsmouth Road,
Guildford. GU3 1LR
United Kingdom.

Member of EOTA www.eota.eu

designated according to Article 29 of the Regulation (EU) No 305/2011 and member of EOTA (European Organisation for Technical Assessment, www.eota.eu)

European Technical Assessment — **ETA 17/1048 of 21/12/2017**

Technical Assessment Body issuing the ETA and designated according to Article 29 of the Regulation (EU) No 305/2011:	UL International (UK) Ltd
Trade name of the construction product	K-FLEX K-FIRE ACRYLIC
Product family to which the construction product belongs	Fire Stopping and Sealing Product: • Penetration Seals
Manufacturer	L'ISOLANTE K-FLEX S.p.A. Via Don G. Locatelli 35 20877 Roncello MB Italy
Manufacturing plant(s)	A/003
This European Technical Assessment contains	63 pages including 1 Annex which forms an integral part of this assessment.
This European Technical Assessment is issued in accordance with regulation (EU) No 305/2011, on the basis of	ETAG 026-2, edition 2011, used as European Assessment Document (EAD).

Translations of this European Technical Assessment in other languages shall fully correspond to the original issued document and should be identified as such.

Communication of this European Technical Assessment, including transmission by electronic means, shall be in full. However, partial reproduction may be made, with the written consent of the issuing Technical Assessment Body. Any partial reproduction has to be identified as such.

ETA 17/1048 of 21/12/2017 – page 1 of 63

UL INTERNATIONAL (UK) LTD
Wonersh House, Building C,
The Guildway,
Old Portsmouth Road,
Guildford. GU3 1LR
United Kingdom.

Member of EOTA www.eota.eu

designated according to Article 29 of the Regulation (EU) No 305/2011 and member of EOTA (European Organisation for Technical Assessment, www.eota.eu)

European Technical Assessment — **ETA 15/0756 of 29/10/2015**

Technical Assessment Body issuing the ETA and designated according to Article 29 of the Regulation (EU) No 305/2011:	UL International (UK) Ltd
Trade name of the construction product	K-Flex K-Fire Collar
Product family to which the construction product belongs	Fire Stopping and Sealing Product: • Penetration Seals
Manufacturer	L' ISOLANTE K-FLEX UK Ltd Unit 9 Coalville Business Park, Jackson Street Coalville Leicestershire LE67 3NR
Manufacturing plant(s)	A/005
This European Technical Assessment contains	12 pages including 1 Annex which forms an integral part of this assessment.
This European Technical Assessment is issued in accordance with regulation (EU) No 305/2011, on the basis of	ETAG 026-2, edition 2011, used as European Assessment Document (EAD).

Translations of this European Technical Assessment in other languages shall fully correspond to the original issued document and should be identified as such.

Communication of this European Technical Assessment, including transmission by electronic means, shall be in full. However, partial reproduction may be made, with the written consent of the issuing Technical Assessment Body. Any partial reproduction has to be identified as such.

ETA 15/0756 of 29/10/2015 – page 1 of 9

UL INTERNATIONAL (UK) LTD
Wonersh House, Building C,
The Guildway,
Old Portsmouth Road,
Guildford. GU3 1LR
United Kingdom.

Member of EOTA www.eota.eu

designated according to Article 29 of the Regulation (EU) No 305/2011 and member of EOTA (European Organisation for Technical Assessment, www.eota.eu)

European Technical Assessment — **ETA 17/1022 of 21/12/2017**

Technical Assessment Body issuing the ETA and designated according to Article 29 of the Regulation (EU) No 305/2011:	UL International (UK) Ltd
Trade name of the construction product	K-FLEX K-FIRE BOARD
Product family to which the construction product belongs	Fire Stopping and Sealing Product: • Penetration Seals
Manufacturer	L'ISOLANTE K-FLEX S.p.A. Via Don G. Locatelli 35 20877 Roncello MB Italy
Manufacturing plant(s)	A/003
This European Technical Assessment contains	51 pages including 1 Annex which forms an integral part of this assessment.
This European Technical Assessment is issued in accordance with regulation (EU) No 305/2011, on the basis of	ETAG 026-2, edition 2011, used as European Assessment Document (EAD).

Translations of this European Technical Assessment in other languages shall fully correspond to the original issued document and should be identified as such.

Communication of this European Technical Assessment, including transmission by electronic means, shall be in full. However, partial reproduction may be made, with the written consent of the issuing Technical Assessment Body. Any partial reproduction has to be identified as such.

ETA 17/1022 of 21/12/2017 – page 1 of 51

UL INTERNATIONAL (UK) LTD
Wonersh House, Building C,
The Guildway,
Old Portsmouth Road,
Guildford. GU3 1LR
United Kingdom.

Member of EOTA www.eota.eu

designated according to Article 29 of the Regulation (EU) No 305/2011 and member of EOTA (European Organisation for Technical Assessment, www.eota.eu)

European Technical Assessment — **ETA 17/1021 of 21/12/2017**

Technical Assessment Body issuing the ETA and designated according to Article 29 of the Regulation (EU) No 305/2011:	UL International (UK) Ltd
Trade name of the construction product	K-FLEX K-FIRE COATING
Product family to which the construction product belongs	Fire Stopping and Sealing Product: • Linear Joint and Gap Seals
Manufacturer	L'ISOLANTE K-FLEX S.p.A. Via Don G. Locatelli 35 20877 Roncello MB Italy
Manufacturing plant(s)	A/003
This European Technical Assessment contains	10 pages including 1 Annex which forms an integral part of this assessment.
This European Technical Assessment is issued in accordance with regulation (EU) No 305/2011, on the basis of	ETAG 026-3, edition 2011, used as European Assessment Document (EAD)

Translations of this European Technical Assessment in other languages shall fully correspond to the original issued document and should be identified as such.

Communication of this European Technical Assessment, including transmission by electronic means, shall be in full. However, partial reproduction may be made, with the written consent of the issuing Technical Assessment Body. Any partial reproduction has to be identified as such.

ETA 17/1021 of 21/12/2017 – page 1 of 10

UL INTERNATIONAL (UK) LTD
Wonersh House, Building C,
The Guildway,
Old Portsmouth Road,
Guildford. GU3 1LR
United Kingdom.

Member of EOTA www.eota.eu

designated according to Article 29 of the Regulation (EU) No 305/2011 and member of EOTA (European Organisation for Technical Assessment, www.eota.eu)

European Technical Assessment — **ETA 17/1020 of 21/12/2017**

Technical Assessment Body issuing the ETA and designated according to Article 29 of the Regulation (EU) No 305/2011:	UL International (UK) Ltd
Trade name of the construction product	K-FLEX K-FIRE COLLAR - E
Product family to which the construction product belongs	Fire Stopping and Sealing Product: • Penetration Seals
Manufacturer	L'ISOLANTE K-FLEX S.p.A. Via Don G. Locatelli 35 20877 Roncello MB Italy
Manufacturing plant(s)	A/007 and A/003
This European Technical Assessment contains	19 pages including 1 Annex which forms an integral part of this assessment.
This European Technical Assessment is issued in accordance with regulation (EU) No 305/2011, on the basis of	ETAG 026-2, edition 2011, used as European Assessment Document (EAD).

Translations of this European Technical Assessment in other languages shall fully correspond to the original issued document and should be identified as such.

Communication of this European Technical Assessment, including transmission by electronic means, shall be in full. However, partial reproduction may be made, with the written consent of the issuing Technical Assessment Body. Any partial reproduction has to be identified as such.

ETA 17/1020 of 21/12/2017 – page 1 of 19

UL INTERNATIONAL (UK) LTD
Wonersh House, Building C,
The Guildway,
Old Portsmouth Road,
Guildford. GU3 1LR
United Kingdom.

Member of EOTA www.eota.eu

designated according to Article 29 of the Regulation (EU) No 305/2011 and member of EOTA (European Organisation for Technical Assessment, www.eota.eu)

European Technical Assessment — **ETA 17/1046 of 21/12/2017**

Technical Assessment Body issuing the ETA and designated according to Article 29 of the Regulation (EU) No 305/2011:	UL International (UK) Ltd
Trade name of the construction product	K-FLEX K-FIRE EX MORTAR
Product family to which the construction product belongs	Fire Stopping and Sealing Product: • Penetration Seals
Manufacturer	L'ISOLANTE K-FLEX S.p.A. Via Don G. Locatelli 35 20877 Roncello MB Italy
Manufacturing plant(s)	A/003
This European Technical Assessment contains	64 pages including 1 Annex which forms an integral part of this assessment.
This European Technical Assessment is issued in accordance with regulation (EU) No 305/2011, on the basis of	ETAG 026-2, edition 2011, used as European Assessment Document (EAD).

Translations of this European Technical Assessment in other languages shall fully correspond to the original issued document and should be identified as such.

Communication of this European Technical Assessment, including transmission by electronic means, shall be in full. However, partial reproduction may be made, with the written consent of the issuing Technical Assessment Body. Any partial reproduction has to be identified as such.

ETA 17/1046 of 21/12/2017 – page 1 of 64

HORĽAVÉ POTRUBIA

ETA17/1049
Page 20-21

FLOOR

Services	Dimensions	Wrap	Classification
PVC-U , PVC-C	≤ 40 mm	50 × 1,8 mm (1 layer)	E 180 U/U, EI 120 U/U
PVC-U , PVC-C	≤ 110 mm	50 × 3,6 mm (2 layers)	EI 240 U/C
PVC-U , PVC-C	≤ 125 mm	50 × 7,2 mm (4 layers)	EI 120 U/C
PVC-U , PVC-C	≤ 160 mm	50 × 10,8 mm (6 layers)	EI 240 C/C
PVC-U , PVC-C	≤ 110 mm*	50 × 3,6 mm (2 layers)	EI 120 U/C
PP	≤ 40 mm	none	EI 120 U/C
PP	≤ 40 mm	50 × 1,8 mm (1 layer)	EI 120 U/U
PP	≤ 110 mm	50 × 3,6 mm (2 layers)	EI 240 U/C
PP	≤ 125 mm	50 × 7,2 mm (4 layers)	EI 240 U/C
PP	≤ 160 mm	50 × 10,8 mm (6 layers)	EI 240 U/C
PP	≤ 110 mm*	50 × 3,6 mm (2 layers)	EI 60 U/C
PE, HD-PE, ABS, SAN+PVC	≤ 40 mm	none	EI 120 U/C
PE, HD-PE, ABS, SAN+PVC	≤ 40 mm	50 × 1,8 mm (1 layer)	EI 240 U/U
PE, HD-PE, ABS, SAN+PVC	≤ 110 mm	50 × 3,6 mm (2 layers)	EI 120 U/C
PE, HD-PE, ABS, SAN+PVC	≤ 125 mm	50 × 7,2 mm (4 layers)	EI 240 U/C
PE, HD-PE, ABS, SAN+PVC	≤ 160 mm	50 × 10,8 mm (6 layers)	EI 120 U/C
PE, HD-PE, ABS, SAN+PVC	≤ 250 mm	75 × 12,6 mm (7 layers)	EI 180 C/C
PE, HD-PE, ABS, SAN+PVC	≤ 110 mm*	50 × 3,6 mm (2 layers)	E 120 U/C, EI 60 U/C

110 mm* – containing a beam with a diameter of up to 90 mm composed of telecommunications cables with a diameter of up to 14 mm

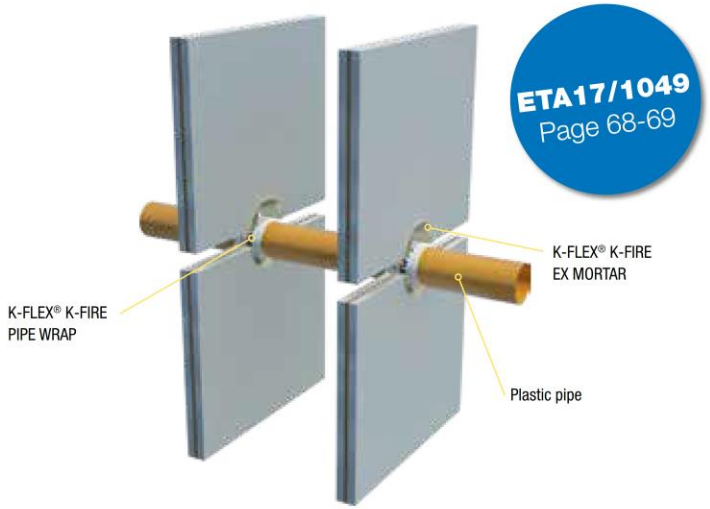

ETA17/1049
Page 68-69

FLEXIBLE/RIGID WALL

Services	Wrap	Classification
Ø ≤ 40 mm PVC-U; PVC-C	50 × 1,8 mm (1 layer)	E120 U/C, C/C ; EI60 U/C, C/C
Ø ≤ 40 mm PE, ABS; SAN+PVC	50 × 1,8 mm (1 layer)	EI120 U/C, C/C
Ø ≤ 40 mm PP	50 × 1,8 mm (1 layer)	EI120 U/C, C/C
Ø ≤ 110 mm PVC-U; PVC-C	50 × 3,6 mm (2 layers)	E120 U/C, C/C ; EI90 U/C, C/C
Ø= 41–110 mm PE, ABS; SAN+PVC	50 × 3,6 mm (2 layers)	EI 60U/C, C/C
Ø= 41–110 mm PP	50 × 3,6 mm (2 layers)	E120 U/C, C/C ; EI90 U/C, C/C
Ø ≤ 125 mm PVC-U; PVC-C	50 × 5,4 mm (3 layers)	EI120 U/C, C/C
Ø ≤ 125 mm PE, ABS; SAN+PVC	50 × 5,4 mm (3 layers)	EI120 U/C, C/C
Ø= 125 mm PP	50 × 5,4 mm (3 layers)	E120 U/C, C/C ; EI90 U/C, C/C
Ø= 160 mm PVC-U; PVC-C	50 × 7,2 mm (4 layers)	EI60 U/C, C/C
Ø= 160 mm PE, ABS; SAN+PVC	50 × 7,2 mm (4 layers)	E120 U/C, C/C ; EI90 U/C, C/C
Ø= 160 mm PP	50 × 7,2 mm (4 layers)	E120 U/C, C/C ; EI90 U/C, C/C

- Maximum aperture 1200 × 2400 mm

HORĽAVÉ POTRUBIA

ETA17/1049
Page 46

Plastic pipe – EI240

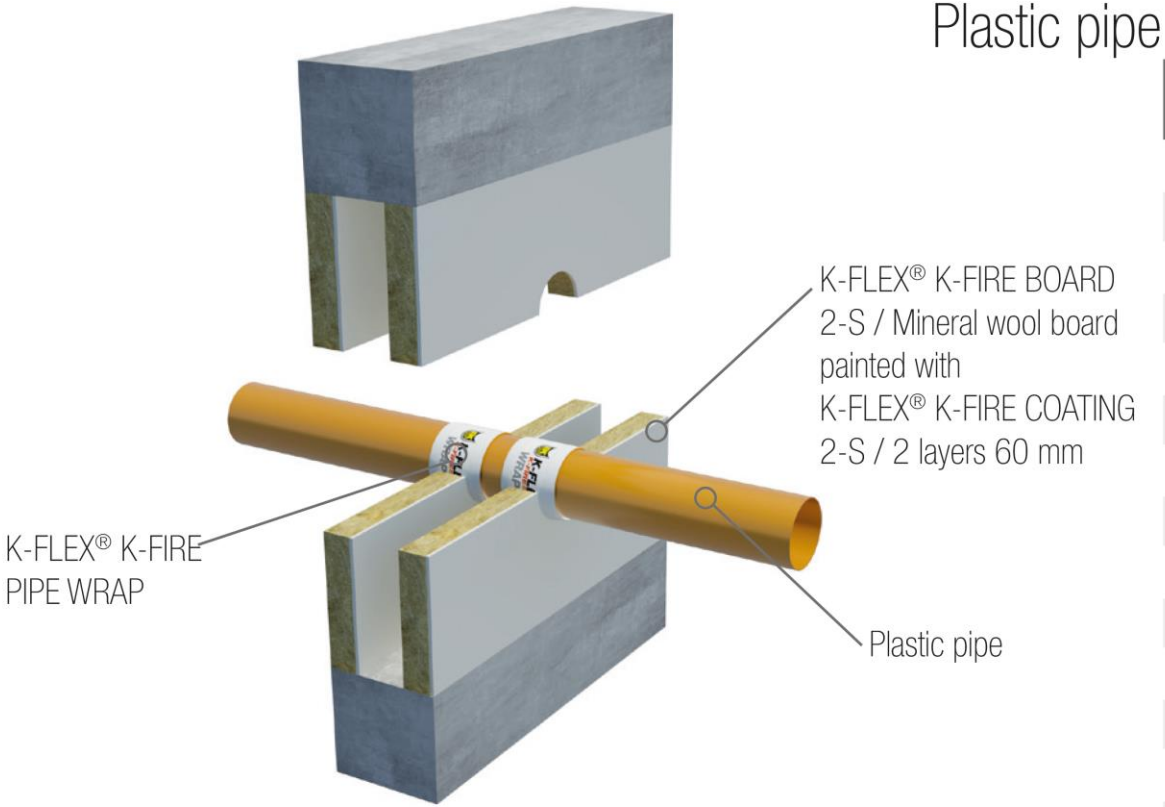

Maximum aperture 1200 × 2400 mm

Services	Wrap	Classification
≤ Ø40 mm PVC-U & PVC-C	50 × 1,8 mm (1 layer)	EI 240 C/C, U/C
≤ Ø40 mm PE, ABS & SAN+PVC	50 × 1,8 mm (1 layer)	EI 240 C/C, U/C
≤ Ø40 mm PP	50 × 1,8 mm (1 layer)	EI 240 C/C, U/C
Ø41–110 mm PVC-U & PVC-C	50 × 3,6 mm (2 layers)	EI 240 C/C, U/C
Ø41–110 mm PE, HD-PE, ABS & SAN+PVC	50 × 3,6 mm (2 layers)	EI 240 C/C, U/C
Ø41–110 mm PP	50 × 3,6 mm (2 layers)	EI 240 C/C
Ø111–125 mm PVC-U & PVC-C	50 × 7,2 mm (4 layers)	EI 240 C/C, U/C
Ø111–125 mm PE, HD-PE, ABS & SAN+PVC	50 × 7,2 mm (4 layers)	EI 240 C/C, U/C
Ø111–125 mm PP	50 × 7,2 mm (4 layers)	EI 240 C/C
Ø126–160 mm PVC-U & PVC-C	50 × 10,8 mm (6 layers)	EI 240 C/C, U/C
Ø126–160 mm PE, HD-PE, ABS & SAN+PVC	50 × 10,8 mm (6 layers)	EI 240 C/C, U/C
Ø126–160 mm PP	50 × 10,8 mm (6 layers)	EI 240 C/C
Ø200–315 mm PVC-U & PVC-C	75 × 18,0 mm (10 layers)	EI 120 C/C
Ø315–400 mm PVC-U & PVC-C	75 × 28,8 mm (16 layers)	EI 120 C/C

WRAP CONSUMPTION ▸ Floor instalation

Diameter	1 layer		2 layers		3 layers		4 layers		5 layers		6 layers		7 layers	
	m	number of passes / culverts from a roll of 25 meters	m	number of passes / culverts from a roll of 25 meters	m	number of passes / culverts from a roll of 25 meters	m	number of passes / culverts from a roll of 25 meters	m	number of passes / culverts from a roll of 25 meters	m	number of passes / culverts from a roll of 25 meters	m	number of passes / culverts from a roll of 25 meters
32	0,11	221	0,25	100										
40	0,14	181	0,30	83										
50	0,17	147	0,36	69	0,58	42,8								
63	0,21	119	0,45	56	0,71	35,4								
75	0,25	101	0,52	48	0,82	30,5								
90	0,30	85	0,62	41	0,96	26,0								
110	0,36	70	0,74	34	1,15	21,8								
125	0,41	62	0,84	30	1,29	19,4	1,77	14,1						
160	0,52	49	1,06	24	1,62	15,4	2,21	11,3	2,83	8,8	3,47	7,2		
200	0,64	39	1,31	19	2,00	12,5	2,71	9,2	3,45	7,2	4,22	5,9	5,01	5,0
250	0,80	31	1,62	15	2,47	10,1	3,34	7,5	4,24	5,9	5,16	4,8	6,11	4,1

ww.cra.sk

WRAP CONSUMPTION ▸ Wall instalation (both sides)

Diameter	1 layer		2 layers		3 layers		4 layers		5 layers		6 layers		7 layers	
	m	number of passes / culverts from a roll of 25 meters	m	number of passes / culverts from a roll of 25 meters	m	number of passes / culverts from a roll of 25 meters	m	number of passes / culverts from a roll of 25 meters	m	number of passes / culverts from a roll of 25 meters	m	number of passes / culverts from a roll of 25 meters	m	number of passes / culverts from a roll of 25 meters
32	0,23	111	0,50	50										
40	0,28	90	0,60	41										
50	0,34	74	0,73	34	1,17	21,4								
63	0,42	59	0,89	28	1,41	17,7								
75	0,50	50	1,04	24	1,64	15,3								
90	0,59	42	1,23	20	1,92	13,0								
110	0,72	35	1,48	17	2,30	10,9								
125	0,81	31	1,67	15	2,58	9,7	3,54	7,1						
160	1,03	24	2,11	12	3,24	7,7	4,42	5,7	5,65	4,4	6,93	3,6		
200	1,28	20	2,61	10	3,99	6,3	5,43	4,6	6,91	3,6	8,44	3,0	10,02	2,5
250	1,60	16	3,24	8	4,94	5,1	6,68	3,7	8,48	2,9	10,32	2,4	12,22	2,0

Oceľové potrubie + MW

ETA17/1048
page 18-19

ETA17/1048
page 53-54

Insulated steel pipe – EI240

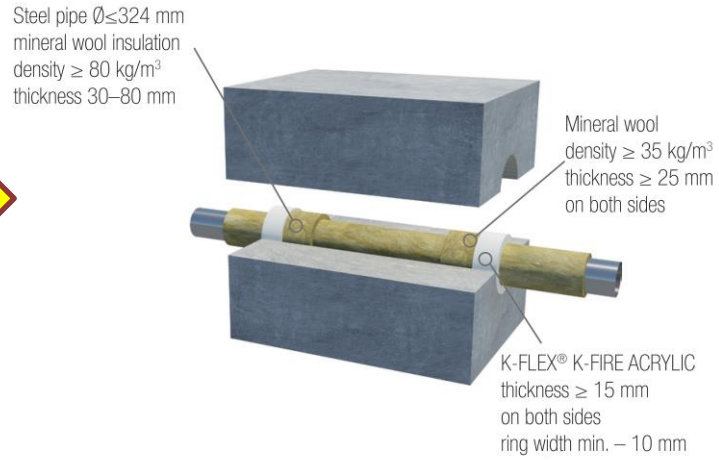

Maximum aperture 300 × 300 mm or Ø= 504 mm

Insulated steel pipe – EI240

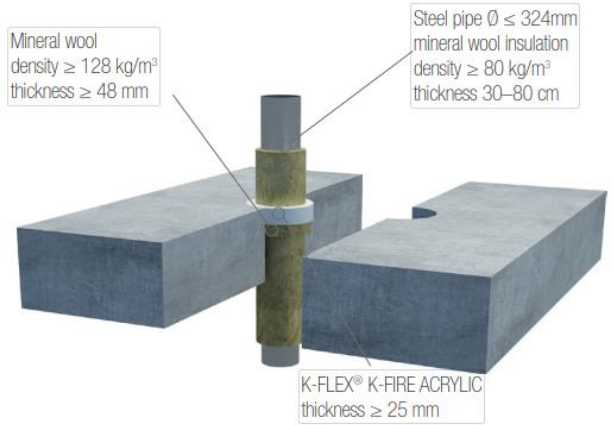

Maximum aperture 300 × 300 mm or Ø= 504 mm

Insulated steel pipe – EI90

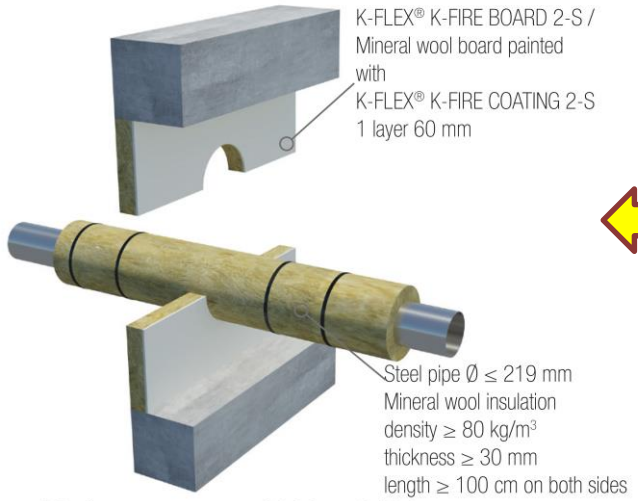

Maximum aperture 1200 × 2400 mm

ETA17/1022
page 15

Insulated steel pipe – EI90

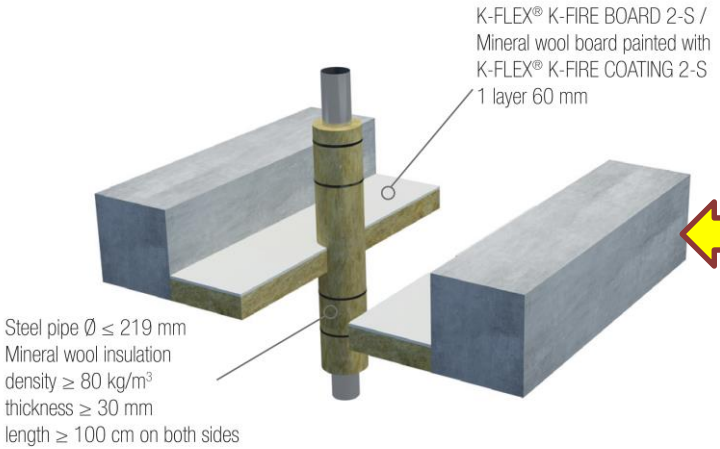

Maximum aperture 600 × 1200 mm

ETA17/1022
page 26

www.cra.sk

Spotreba K-Fire Acrylic / K-Fire náter

K-FLEX® ▸ K-FIRE ACRYLIC

		APPROXIMATELY CONSUMPTION OF K-FIRE ACRYLIC (ml)*	
Pipe diameter (mm)	MW thickness (mm)	15mm both side of wall	25mm floor
22	20	68	57
28	30	94	77
35	30	99	83
42	40	124	104
54	50	154	129
60	50	160	134
76	70	213	177
89	80	244	203
114	100	305	254
140	100	330	275
165	100	353	294

* Ring 10mm

Approximate consumption of K-FIRE Coating (1mm WFT)

1ltr = 1m²

1pail (8ltr) = 8m²

Káble / káble v zväzkoch/ káblové žľaby

ETA17/1048
page 48

Cable – EI120

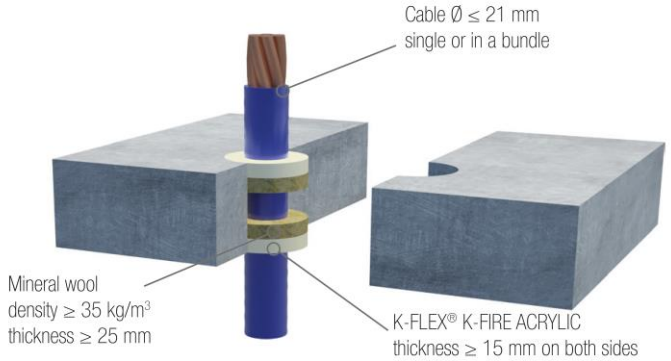

Maximum aperture 300 × 300 mm

ETA17/1048
page 28

Cable – EI120

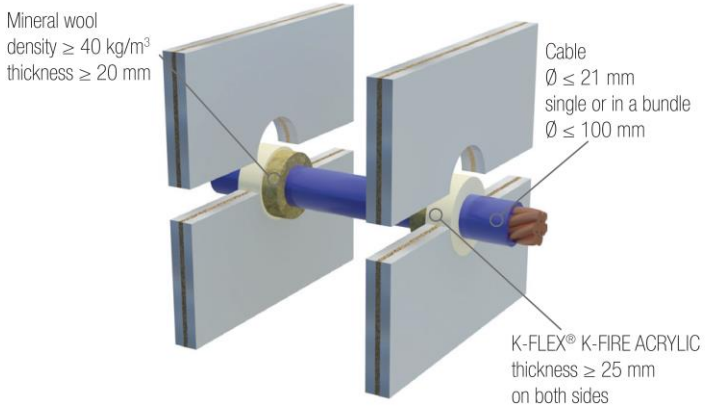

Maximum aperture 300 × 300 mm

Cable and cable tray – EI120

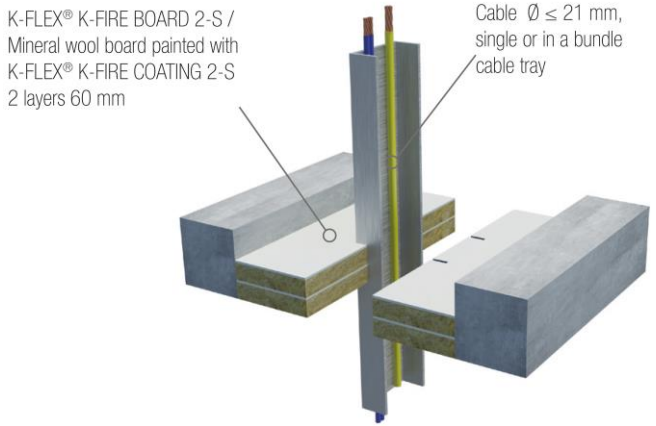

Maximum aperture 1200 × 2400 mm

ETA17/1022
page 21

Cable and cable tray – EI120

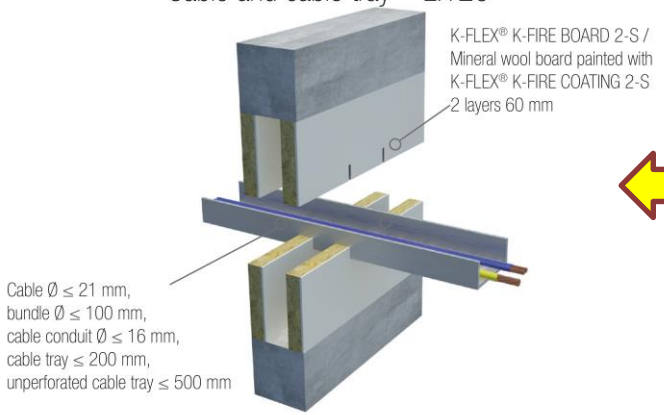

Maximum aperture 1200 × 2400 mm

ETA17/1022
page 8

www.cra.sk

Medené potrubie/ oceľové potrubie + FEF

Insulated steel pipe – EI120

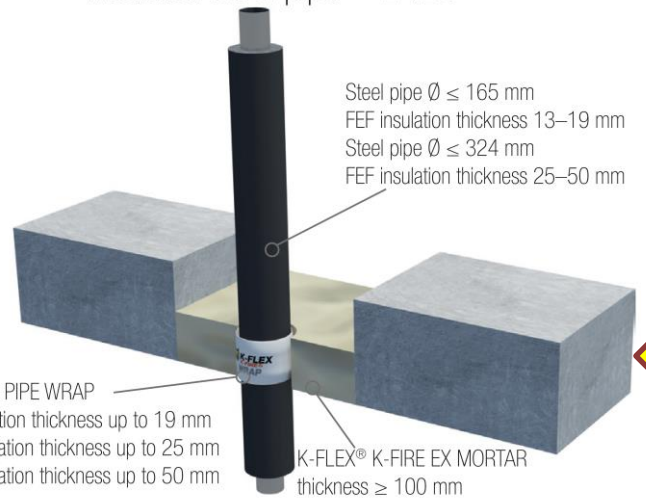

Maximum aperture 1200 × 2400 mm

ETA17/1049
page 14 i 16-17

Insulated copper pipe – EI120

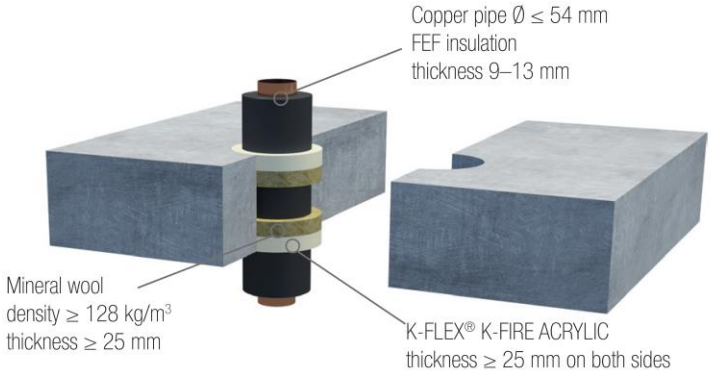

Maximum aperture 300 × 300 mm

www.cra.sk

Insulated steel pipe – EI90

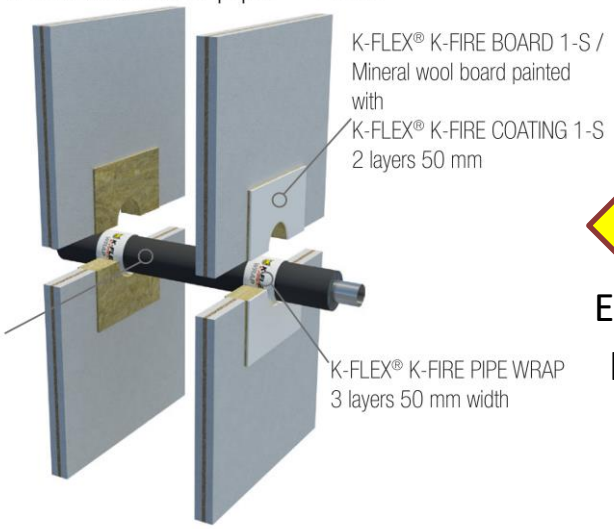

Maximum aperture 1200 × 2400 mm

ETA17/1049
page 53-54

ETA17/1049
page 42

Insulated copper pipe – EI120

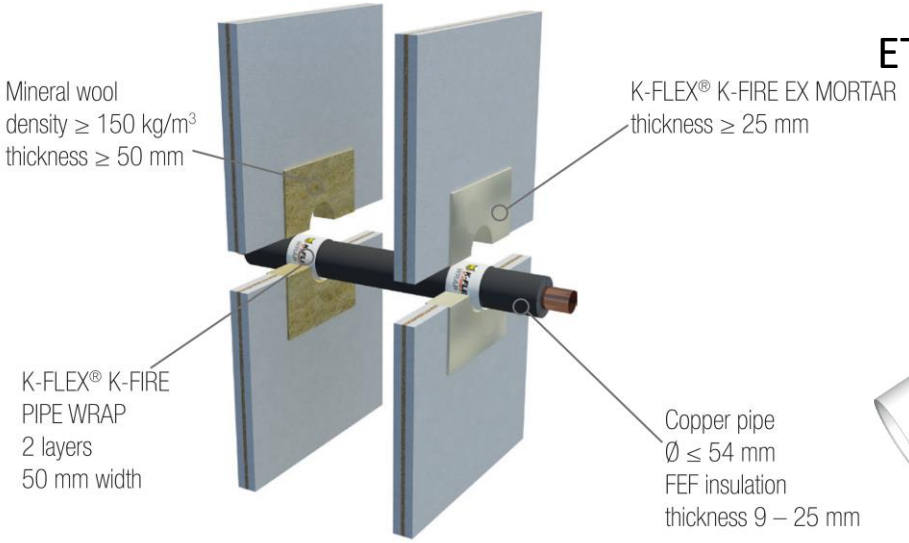

Maximum aperture 1200 × 2400 mm

ETA17/1048
page 59

PEX potrubie + FEF

ETA17/1049
page 42

ETA17/1049
page 51-52

Insulated Alupex pipe – EI120

Maximum aperture 1200 × 2400 mm

Insulated Pex/Al/Pex pipe – EI120

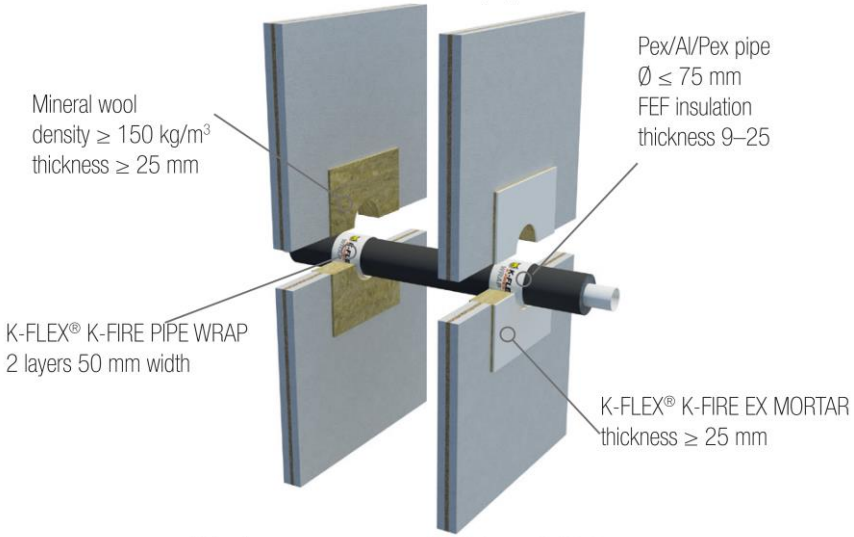

Maximum aperture 1200 × 2400 mm

AKO PRIPARVIŤ K-FIRE BOARD
(DOSKA Z MINERÁLNEJ VLNY + K-FIRE NÁTER)

ETA 17/ 1021, strana 3 bod 3;

„ K-FLEX K-FIRE COATING /náter/ na dosky z minerálnej vlny, sa používa na dosky z minerálnej vlny hustoty 150-170kg/m3, s minimálnou hrúbkou 1 mm WFT (hrúbka vlhkej vrstvy). Hrúbka vlhkej vrstvy náteru by mala byť zmeraná a overená na minimálne 5 miestach, aby sa zabezpečila správna aplikácia. Doska z minerálnej vlny môže byť dodaná zo spoločnosti C.R.A. spol. s r.o., alebo môže byť zabezpečená z iného zdroja. Inštalácia náteru K-FLEX K-FIRE COATING a dosky K-FLEX K-FIRE BOARD musí byť v súlade s návodm na inštaláciu spoločnosti L'ISOLANTE K-FLEX S.p.A."

Systém K-FLEX K-FIRE COATING, ak je dodaný/aplikovaný vo výrobnom závode je označovaný ako K-FLEX K-FIRE BOARD 2-S (náter z oboch strán dosky) a 1-S (náter z jednej strany dosky).